CASE & CORD DIMENSION

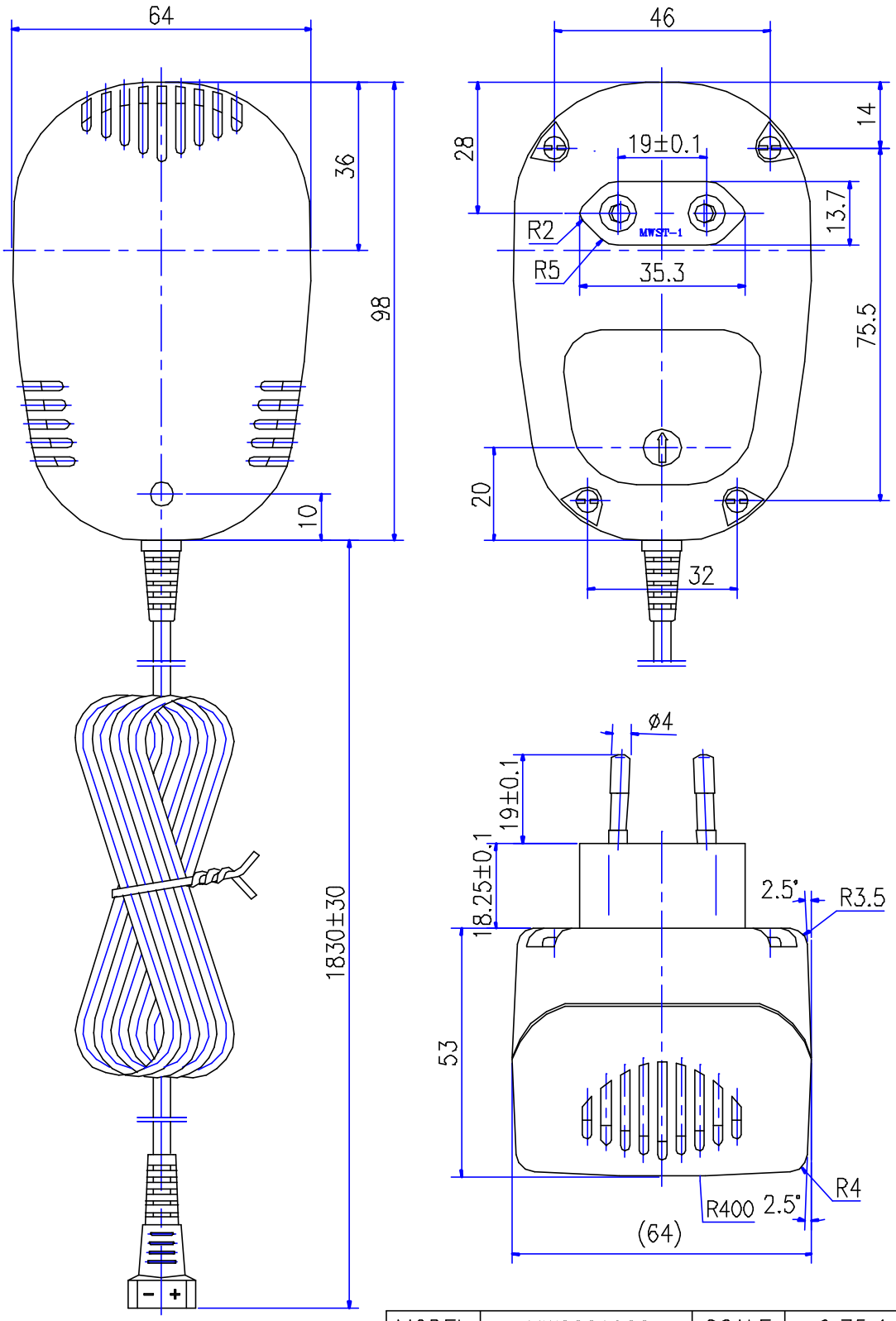

MODEL	MWS8210GS	SCALE	0.75:1
File	H\WWD\928\S9210U6		
DESIGNED BY		DATE	
DRAWN BY		DATE	
CHECKED BY	卓超	DATE	